Series P000 SOLENOID VALVE

Model#

P02003811F2AH

2-Way, Pilot Diaphragm Solenoid Valve, Normally Closed

Technical Specifications

Pipe Size (Inch)	Orifice Size (Inch)	Flow Factor (CV)
3/8"	**7/16"**	**3**

Voltage	Power	Min. Pressure (PSI)	Max Pressure (AC)
24VAC	**17VA**	**1.5**	**217**

Temperature Range	Medium Examples	Sealing Material
5° + 302° F	**Light Oils, Air, Water**	**FKM**

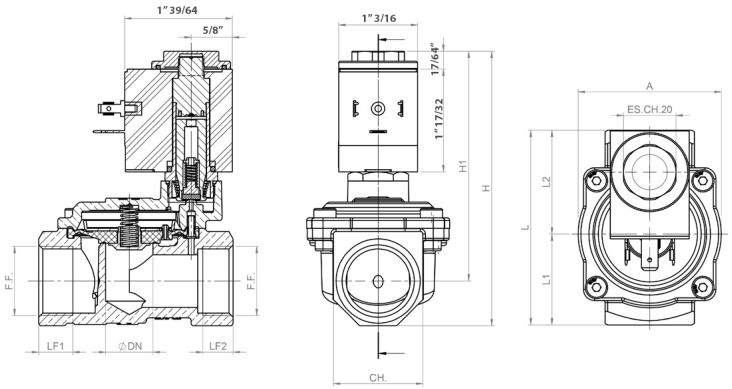

Valve Dimensions

(F.F):	3/8"
(DN):	7/16"
(LF1):	33/64"
(LF2):	1/2"
(L1):	1"1/4
(L2):	1"
(L):	2"1/4
(A):	1"5/8
(H1):	2"5/8
(H):	3"1/8
(CH):	1"5/16

Electrical Connection

Rating:	NEMA 4/ IP 65
Strain Relief Connector:	Model 020